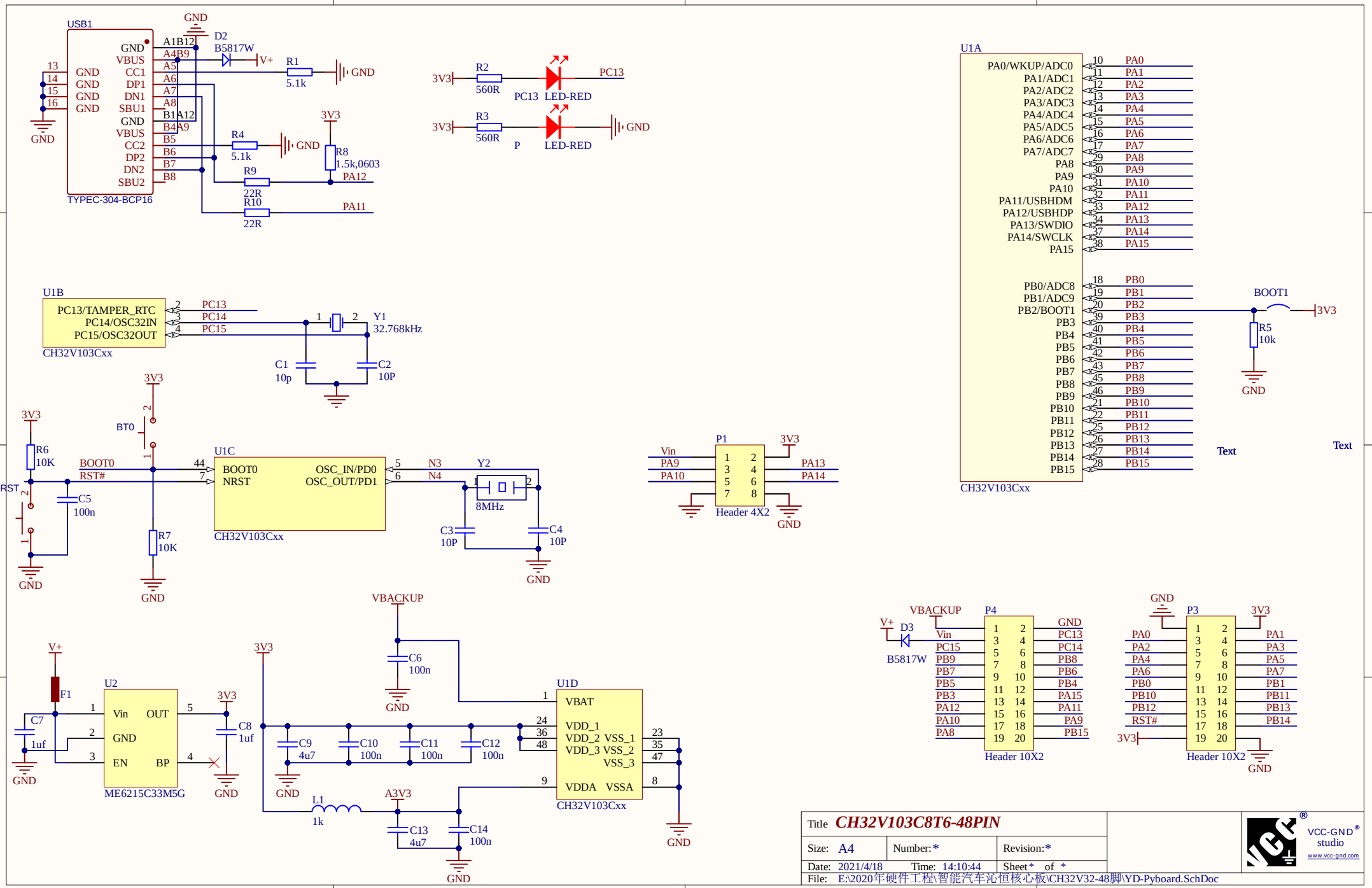
USB1
TYPEC-304-BCP16
GND
VBUS
CC1
DP1
DN1
SBU1
CC2
DP2
DN2
SBU2
A1B12
A4B9
A5
A6
A7
A8
B1A12
B4A9
B5
B6
B7
B8
D2
B5817W
V+
R1
5.1k
R4
5.1k
R2
560R
R3
560R
3V3
PC13
LED-RED
P
R8
1.5k,0603
R9
22R
R10
22R
PA12
PA11
U1B
CH32V103Cxx
PC13/TAMPER_RTC
PC14/OSC32IN
PC15/OSC32OUT
PC14
PC15
Y1
32.768kHz
C1
10p
C2
10P
BT0
R6
10K
BOOT0
RST#
RST
C5
100n
R7
10K
U1C
OSC_IN/PD0
OSC_OUT/PD1
N3
N4
Y2
8MHz
C3
10P
C4
10P
P1
Header 4X2
Vin
PA9
PA10
PA13
PA14
U1A
PA0/WKUP/ADC0
PA1/ADC1
PA2/ADC2
PA3/ADC3
PA4/ADC4
PA5/ADC5
PA6/ADC6
PA7/ADC7
PA8
PA9
PA10
PA11/USBHDM
PA12/USBHDP
PA13/SWDIO
PA14/SWCLK
PA15
PB0/ADC8
PB1/ADC9
PB2/BOOT1
PB3
PB4
PB5
PB6
PB7
PB8
PB9
PB10
PB11
PB12
PB13
PB14
PB15
BOOT1
R5
10k
Text
F1
U2
ME6215C33M5G
Vin
OUT
EN
BP
C7
1uf
C8
1uf
VBACKUP
C6
100n
C9
4u7
C10
100n
C11
100n
C12
100n
L1
1k
A3V3
C13
4u7
C14
100n
U1D
CH32V103Cxx
VBAT
VDD_1
VDD_2
VDD_3
VSS_1
VSS_2
VSS_3
VDDA
VSSA
D3
B5817W
P4
Header 10X2
P3
Header 10X2
RST#
Title CH32V103C8T6-48PIN
Size: A4
Number: *
Revision: *
Date: 2021/4/18
Time: 14:10:44
Sheet * of *
File: E:\2020年硬件工程\智能汽车沁恒核心板\CH32V32-48脚\YD-Pyboard.SchDoc
VCC-GND studio
www.vcc-gnd.com