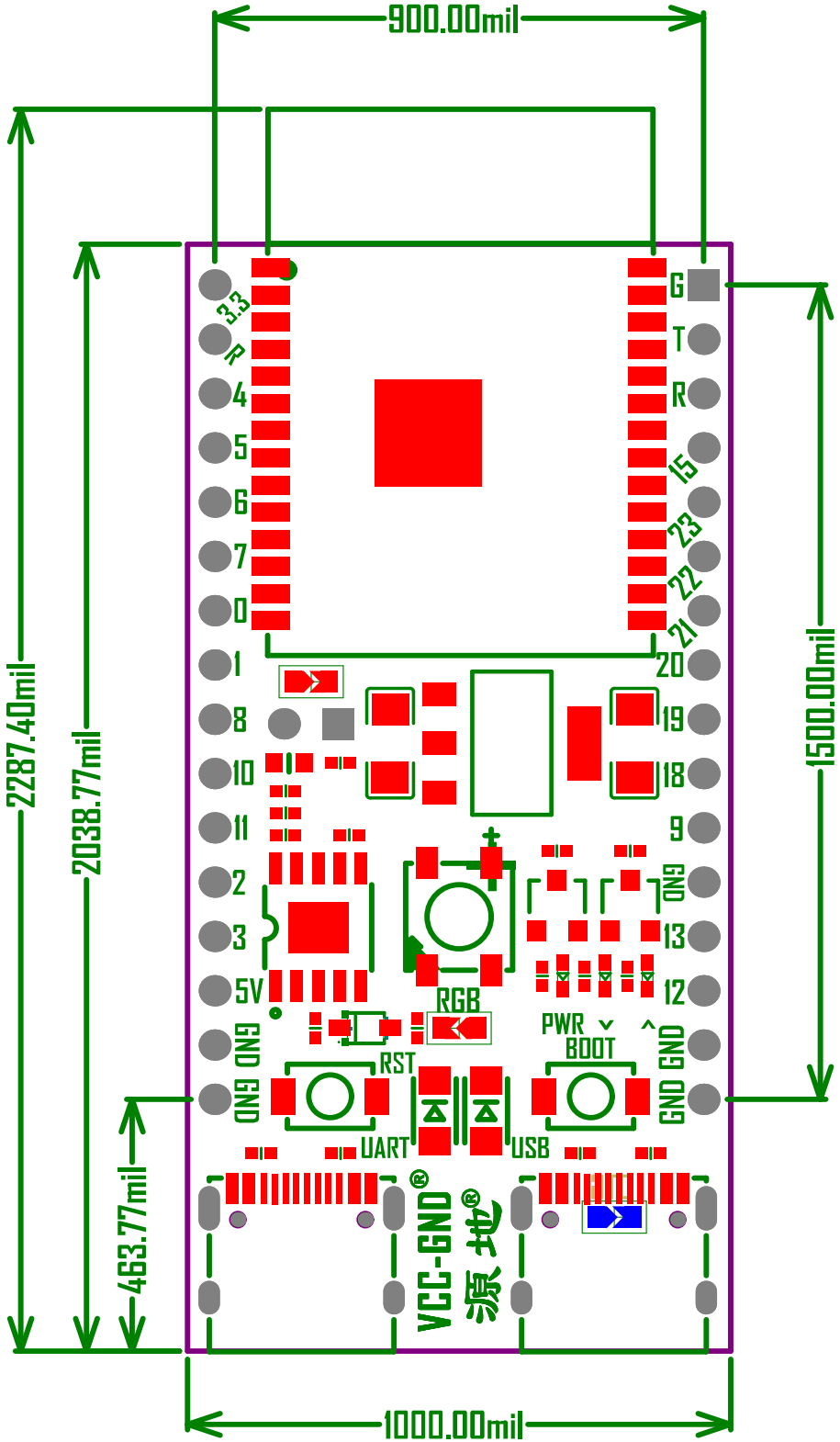
900.00mil
2287.40mil
2038.77mil
463.77mil
1500.00mil
1000.00mil
3.3
R
4
5
6
7
0
1
8
10
11
2
3
5V
GND
GND
G
T
R
15
23
22
21
20
19
18
9
GND
13
12
GND
GND
RGB
RST
PWR
BOOT
UART
USB
VCC-GND®
源地®