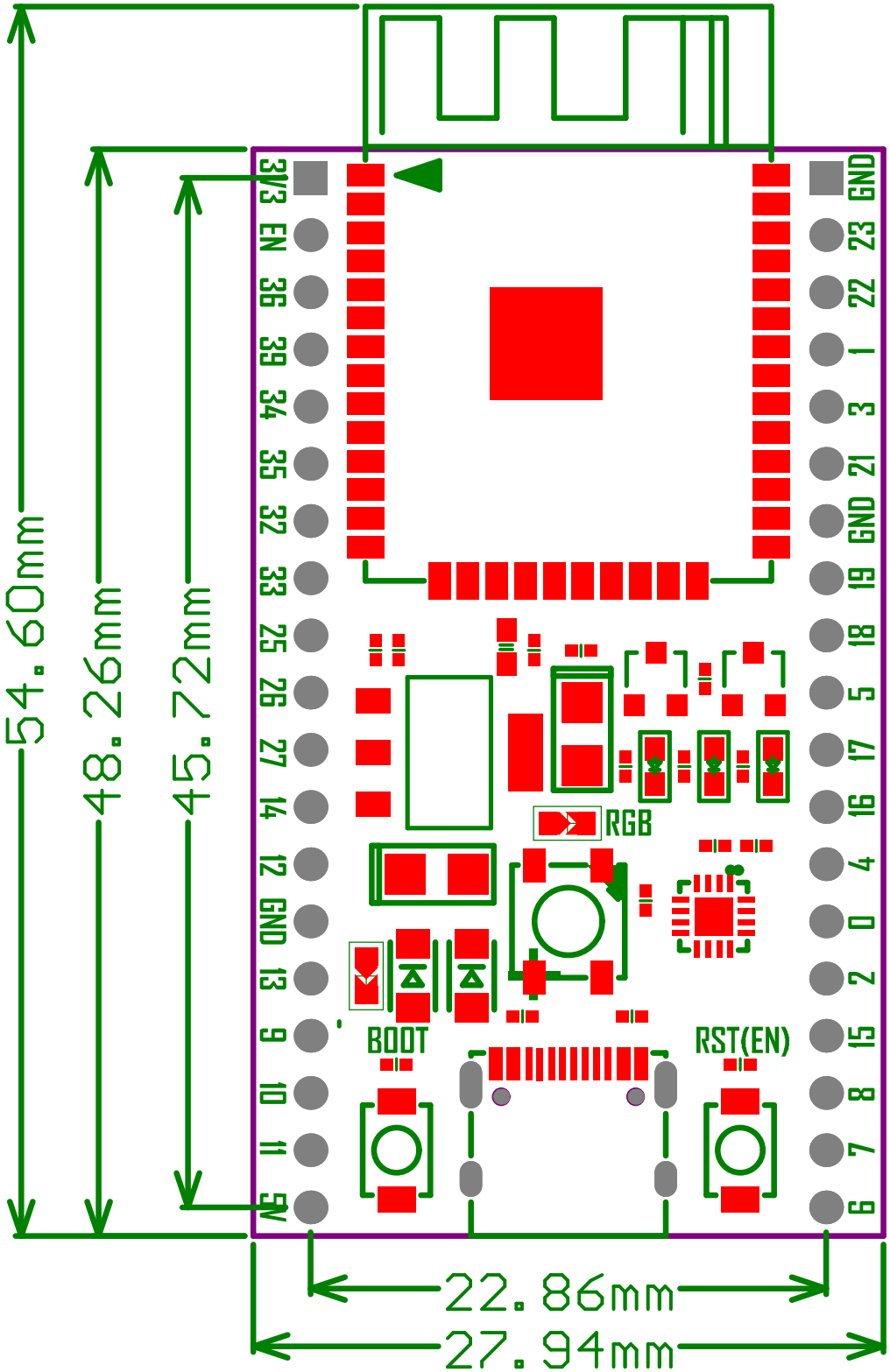
3V3
EN
36
39
34
35
32
33
25
26
27
14
12
GND
13
9
10
11
5V
GND
23
22
1
3
21
GND
19
18
5
17
16
4
0
2
15
8
7
6
RGB
BOOT
RST(EN)
54.60mm
48.26mm
45.72mm
22.86mm
27.94mm