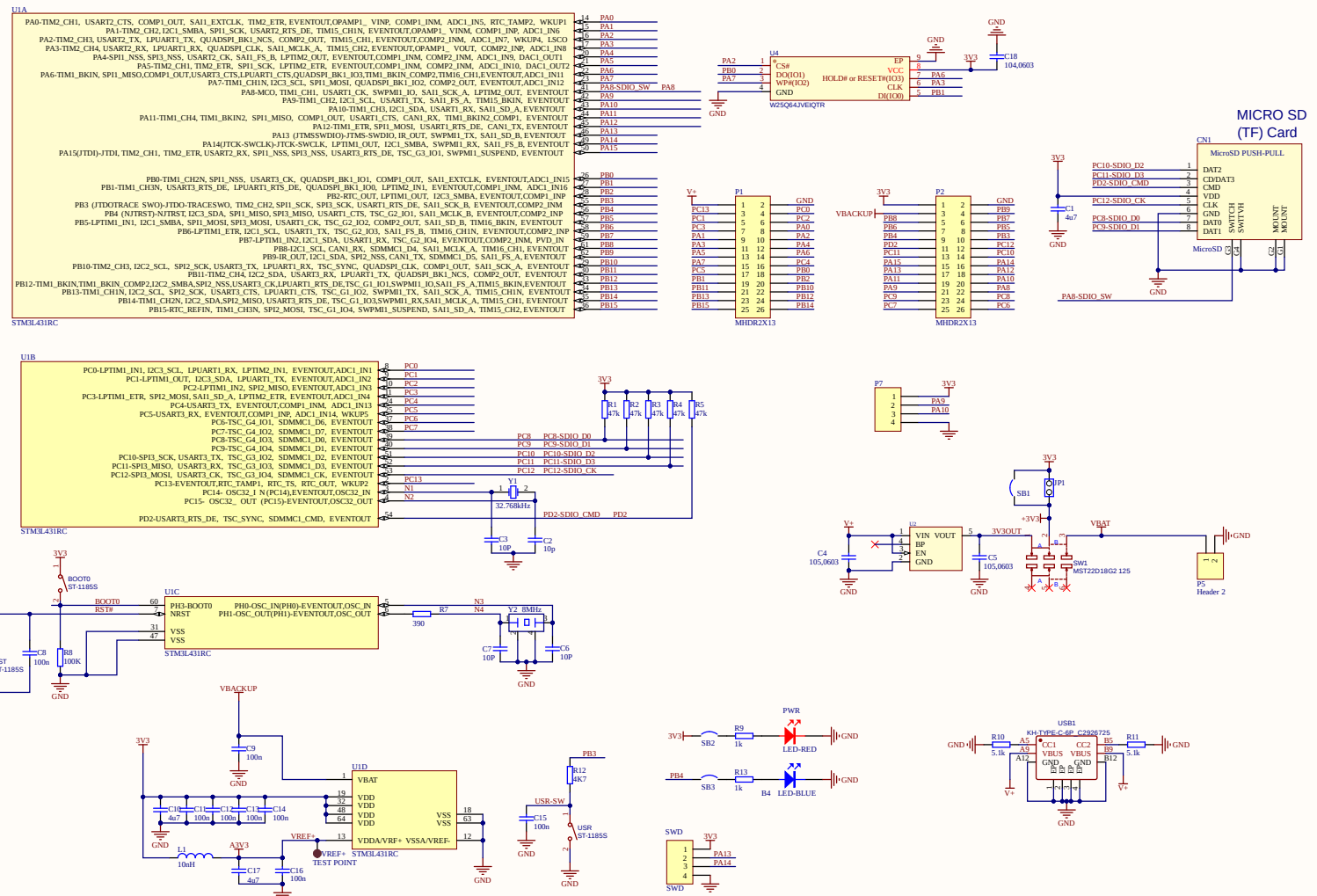

Title	YD-STM32L431RCT6		
Size: A2	Number:*	Revision:*	
Date: 2022/6/6	Time: 21:00:46	Sheet * of *	
File: D:\2022年硬件设计\STM32L431RCT6\YD-Pyboard.SchDoc			

湿地工作室 VCC-GND studio VCC-GND.COM